DOCUMENT NO.	SHEET 1 OF 2	REV.
MHD24M800XX		A

REVISIONS

LTR	DESCRIPTION	DATE
A	INITIAL RELEASE	11/21/2022

TABLE 1: PLATING THICKNESS AND MATERIAL BY PART NUMBER

PART NUMBER	GOLD IN CONTACT AREA	COMPLAINT	NICKEL OVERALL	NICKEL IN CONTACT AREA
MHD24M800MI	50 µ-INCH MIN	5 µ-INCH MIN GOLD	50 µ-INCH MIN	80 µ-INCH MIN

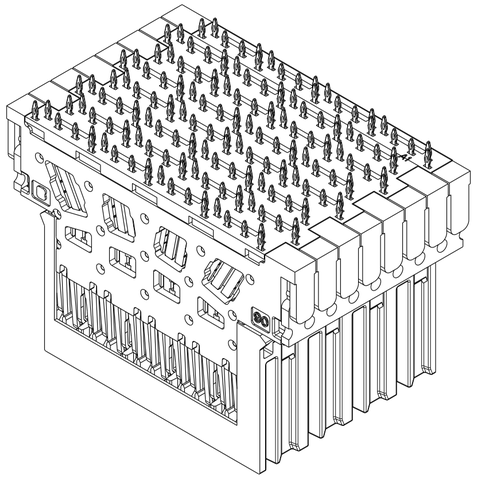

ISOMETRIC VIEW
(COMPLIANT GUIDE FULLY SEATED)
SCALE 4

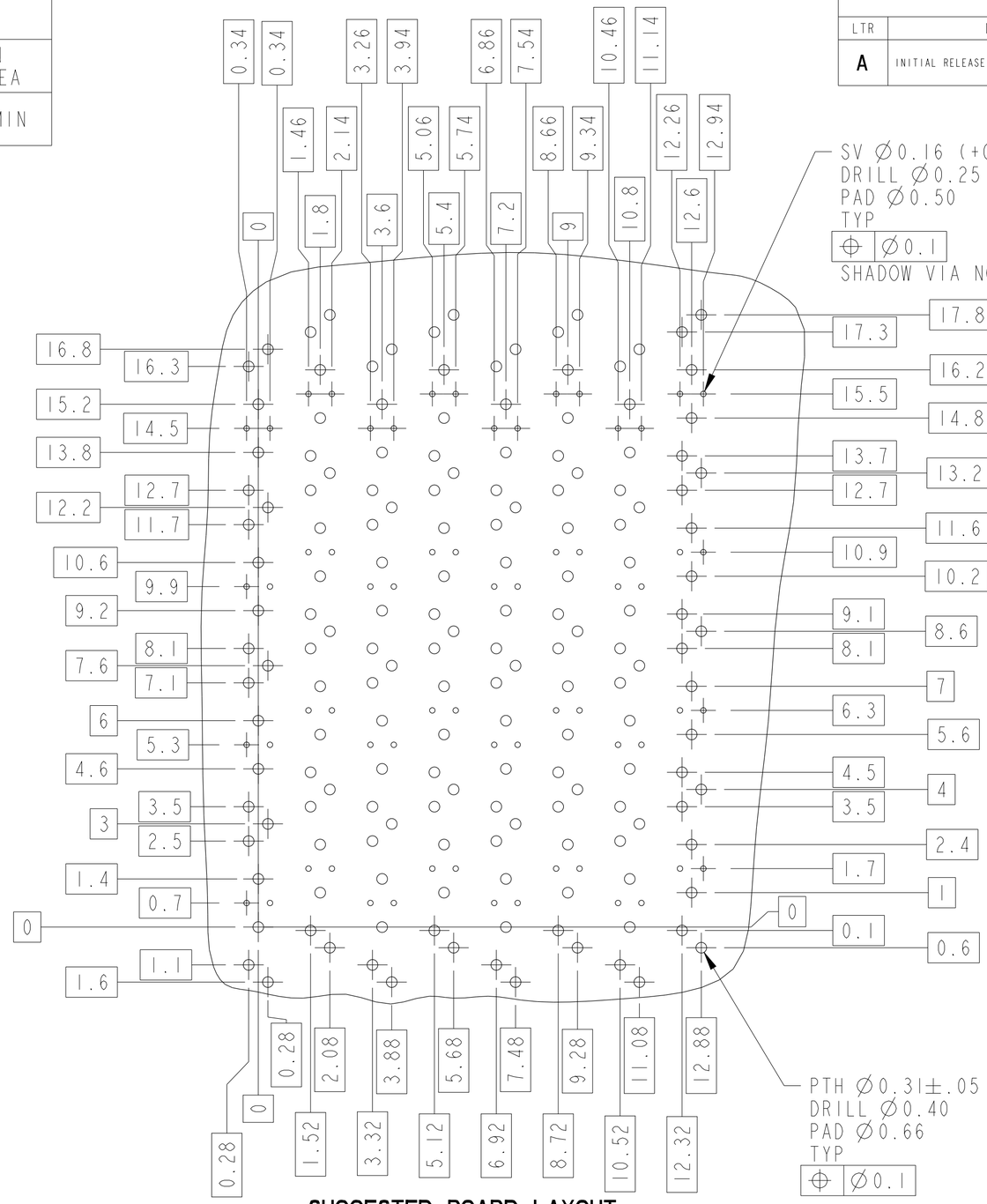

SUGGESTED BOARD LAYOUT
SCALE 9

7. SURFACE GROUND PLANE EQUAL TO COMPLIANT OUTLINE REQUIRED. SURFACE GROUND PLANE TO BE FREE FROM SOLDER MASK.

6. SHADOW VIAS DO NOT RECEIVE COMPLIANT PINS. THEY ARE ADDED FOR IMPROVED SIGNAL INTEGRITY PERFORMANCE AND CAN CHANGE IN SIZE AND LOCATION BASED UPON THE SPECIFIC DESIGN DETAILS.

5. NOMINAL DIMENSIONS ARE FOR FULLY SEATED CONNECTORS.

4. FOR WAFER PITCH USE 1.80mm NOMINAL FOR DAUGHTERCARD LAYOUT.

3. SEE TABLE 1 FOR PART NUMBER AND FINISHES

2. PTH CALLOUT
   TYPICAL HOLE
   Ø0.38-0.43 DRILL
   Ø0.31±0.05 FINISHED HOLE
   Ø0.66 PAD

1. HOUSING: GLASS FILLED LCP, UL94 - V0
   CONTACT: Cu ALLOY
   STIFFENER: STAINLESS STEEL, PASSIVATED

NOTES:

THE USE OF THIS DOCUMENT IS UNLIMITED. HOWEVER, DOCUMENTS REFERENCED HEREON MAY CONTAIN LIMITED RIGHTS DATA.

RELEASED / Feb. 03 2025 10:12:43 AM

NEXT ASSEMBLY: NONE

METRIC DOCUMENT

PRO/ENGINEER INFORMATION
Pro/e Model Used: MHD24M800XX.ASSEM
Drawing Name: MHD24M800XX
ENG PDM INFORMATION (REFERENCE ONLY) — REVISION A, VERSION 7

UNLESS OTHERWISE SPECIFIED
LINEAR DIMENSIONS ARE IN: **MILLIMETERS**
TOLERANCES:
ANGLES= ±2°
NO DEFAULT LINEAR TOLERANCES
DIM.& TOL. PER ASME Y14.5M-1994;
DRM PER MIL-DTL-31000;
OTHER AMPHENOL STANDARDS: 9-3800
LEGENDS:
FLAG NOTE CALL OUT
REFERENCE ONLY

SPECIFICATIONS
MATERIAL SPEC.: NONE
PROCESS SPEC.: NONE

POS	QTY	PART NUMBER	DESCRIPTION	NOTE

PARTS LIST

APPROVALS		DATE
PREPARED BY:	K. TOMPKINS	21-Jan-25
ENGINEER IN CHARGE:	G. PECK	
DESIGN MANAGER:	G. PECK	
DESIGN ACTIVITIES GROUP	BLP	

THIRD ANGLE PROJECTION

AMPHENOL CORPORATION
40-60 DELAWARE AVENUE
SIDNEY, N.Y. 13838

ELECTRICAL CONNECTOR, MEZZANINE, MHD2, 4 PAIR 8 COLUMN

SIZE	CAGE CODE	DOCUMENT NO.	REV.
A2	77820	MHD24M800XX	A

SCALE: 3.0 | REF: MHD24P800X | SHEET 1 OF 2

FORMAT: A2-U.E-1

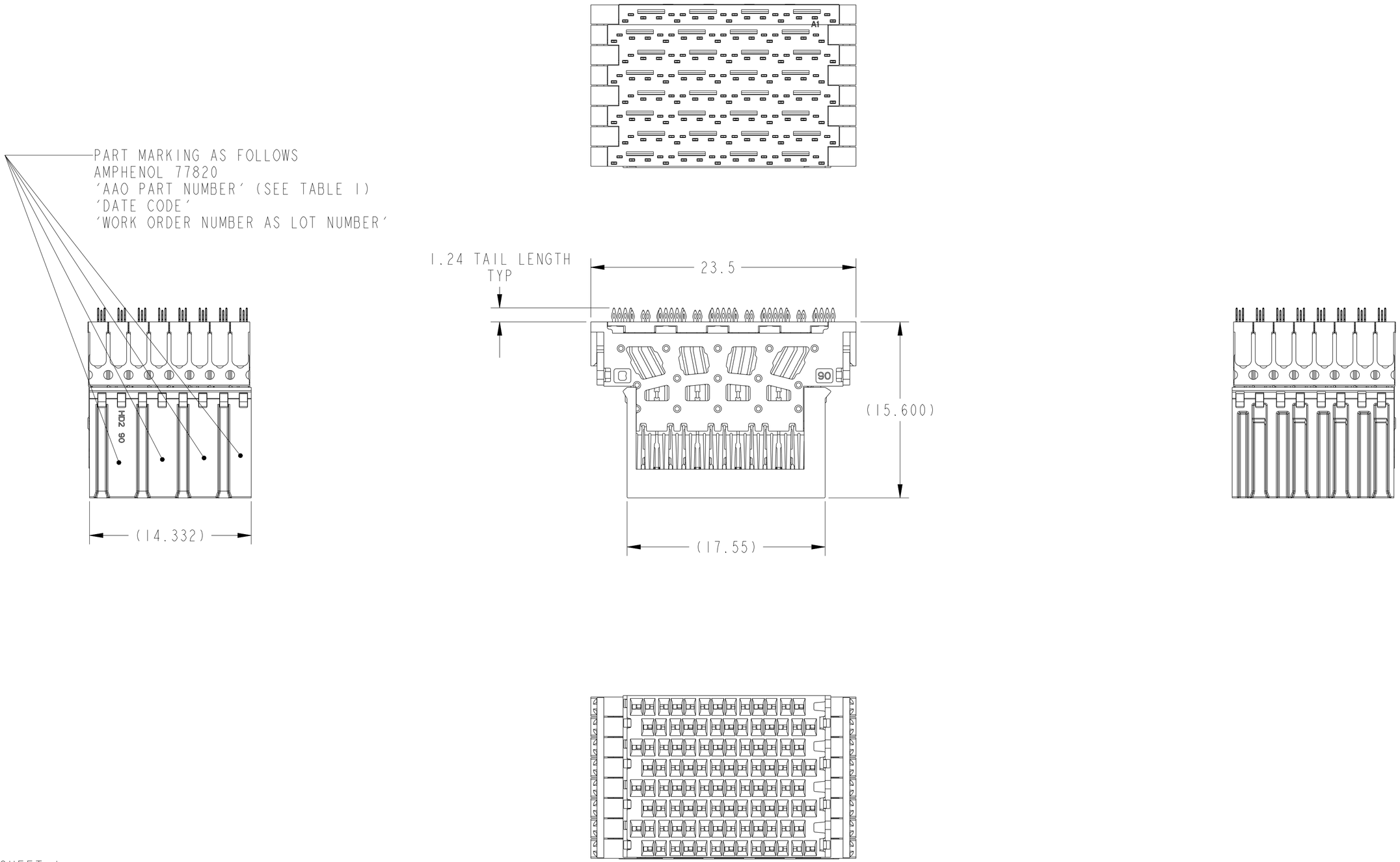

SEE SHEET 1

NOTES:

THE USE OF THIS DOCUMENT IS UNLIMITED.
HOWEVER, DOCUMENTS REFERENCED HEREON
MAY CONTAIN LIMITED RIGHTS DATA.

RELEASED / Feb. 03 2025 10:12:43 AM

METRIC DOCUMENT

ENG PDM INFORMATION
(REFERENCE ONLY)

REVISION	SIZE	CAGE CODE	DOCUMENT NO.	REV.
A	A2	77820	MHD24M800XX	A
VERSION 7	SCALE: 4.0	REF. MHD24P800X	SHEET 2 OF 2	

DOCUMENT NO. MHD24M800XX | SHEET 2 OF 2 | REV. A

FORMAT: A2-U_E-1