Amphenol SOCAPEX

Active Optical Cable HDMI

Extend your HDMI 2.0 over long distances

NEW

Description

In the copper version, the performance of the HDMI 2.0 protocol decreases from 5 meters. Our HDMI 2.0 AOC (Active Optical Cable) is a plug-and-play hybrid cable with copper for the power supply and fiber for the signal. With this technology, you don't need an external power supply, just the power from your source.
Our HDMI 2.0 AOC will enable you to extand this signal up to a maximum of 100 meters without losing perfomance.

Main features

Main characteristics:

- 100 meters maximum with guaranteed performances.
- HDMI cordset is provided by Amphenol.
- Shock, vibration and traction resistance
- Improved EMI protection
- Mate with our HDMIFTV series (MIL-DTL-38999 series III type) with anti-decoupling device - Shell size 17

Environmental protection:

- Sealing (when mated): IP68 (temporary immersion)
- Salt spray:
  48 h - Aluminum shell with Nickel plating ✓
  500 h - Aluminum shell with Black zinc nickel plating ✓
  500 h - Aluminum shell with Olive drab cadmium plating
  500 h - Aluminum shell with Tin-zinc plating ✓ NEW
  500 h - Marine bronze shell ✓
- Humidity: 21 days, 43°C, 98% humidity
- Temperature range: - 40°C / + 85°C
- Cable material in polyurethane

AOC HDMI wiring diagram

✓: RoHS compliant

Câblage *Wiring*				
HDMI		Numéro de fil *Wire number*	HDMI	
N° contact *Pin number*	Nom du signal *Signal name*		N° contact *Pin number*	Nom du signal *Signal name*
1	DATA2P	Fibre 1 *Fiber*	1	DATA2P
3	DATA2N		3	DATA2N
4	DATA1P	Fibre 2 *Fiber*	4	DATA1P
6	DATA1N		6	DATA1N
7	DATA0P	Fibre 3 *Fiber*	7	DATA0P
9	DATA0N		9	DATA0N
10	CLKP	Fibre 4 *Fiber*	10	CLKP
12	CLKN		12	CLKN
2, 5, 8, 11, 17	GND	1	2, 5, 8, 11, 17	GND
13	CEC	2	13	CEC
14	UTILITY	3	14	UTILITY
15	SCL	4	15	SCL
16	SDA	5	16	SDA
18	HDMI_5V	6	18	HDMI_5V
19	HOT_PLUG	7	19	HOT_PLUG

Check that the AOC solution is compatible with the configuration.

Markets & Applications

C6ISR, Battlefield Communication

Ground Vehicles

Naval

Applications :

- Displays, Consoles, Visions systems, Situation awareness

AOC HDMI

Available configurations

Plug with cordset – Shell type 6

Part number type: **OA HDMI FTV 6 X X XXXX**

X: see the How to order to complete your part number

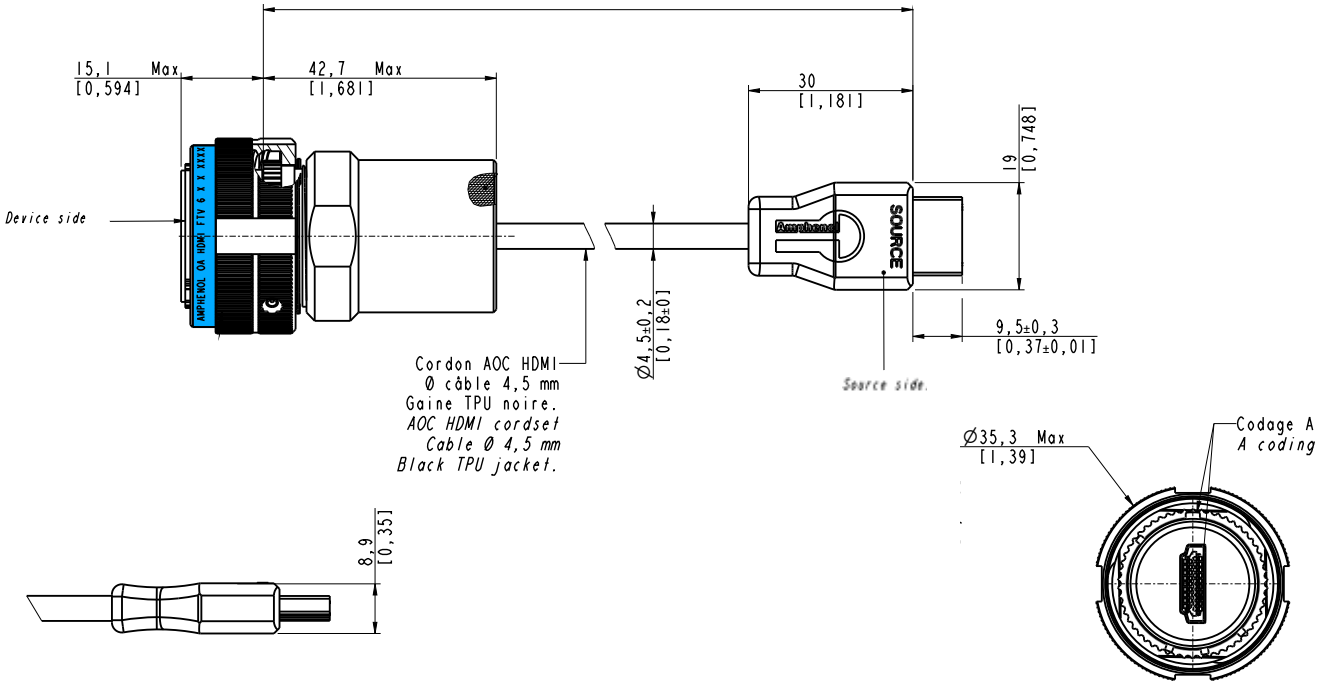

Jam nut receptacle – Shell type 7 - Hexagonal nut mounting

Part number type: **OA HDMI FTV 7 X X XXXX**

X: see the How to order to complete your part number

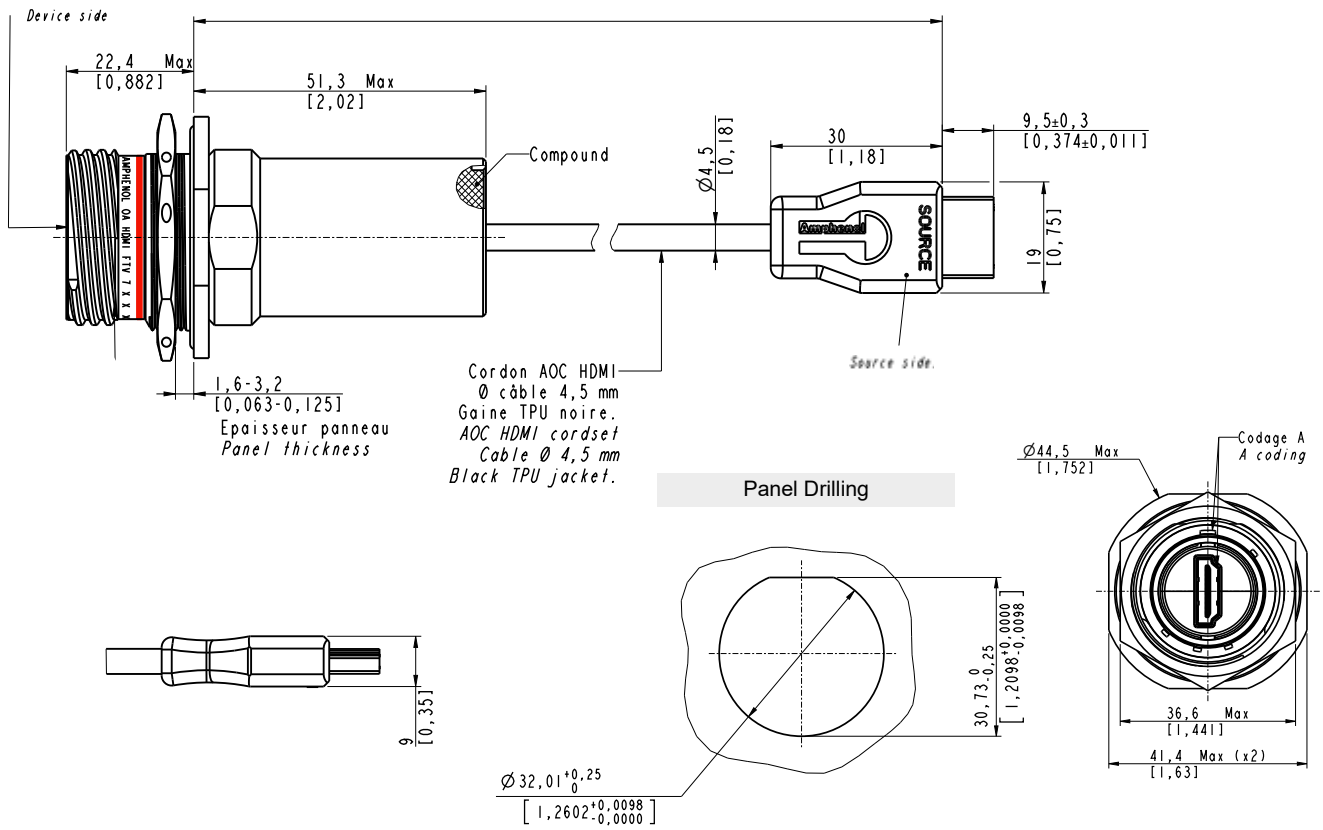

AOC HDMI

Available configurations

Square flange receptacle – Shell type 2 - Hexagonal nut mounting

Part number type: **OA HDMI FTV 2 X X XXXX**

X: see the How to order to complete your part number

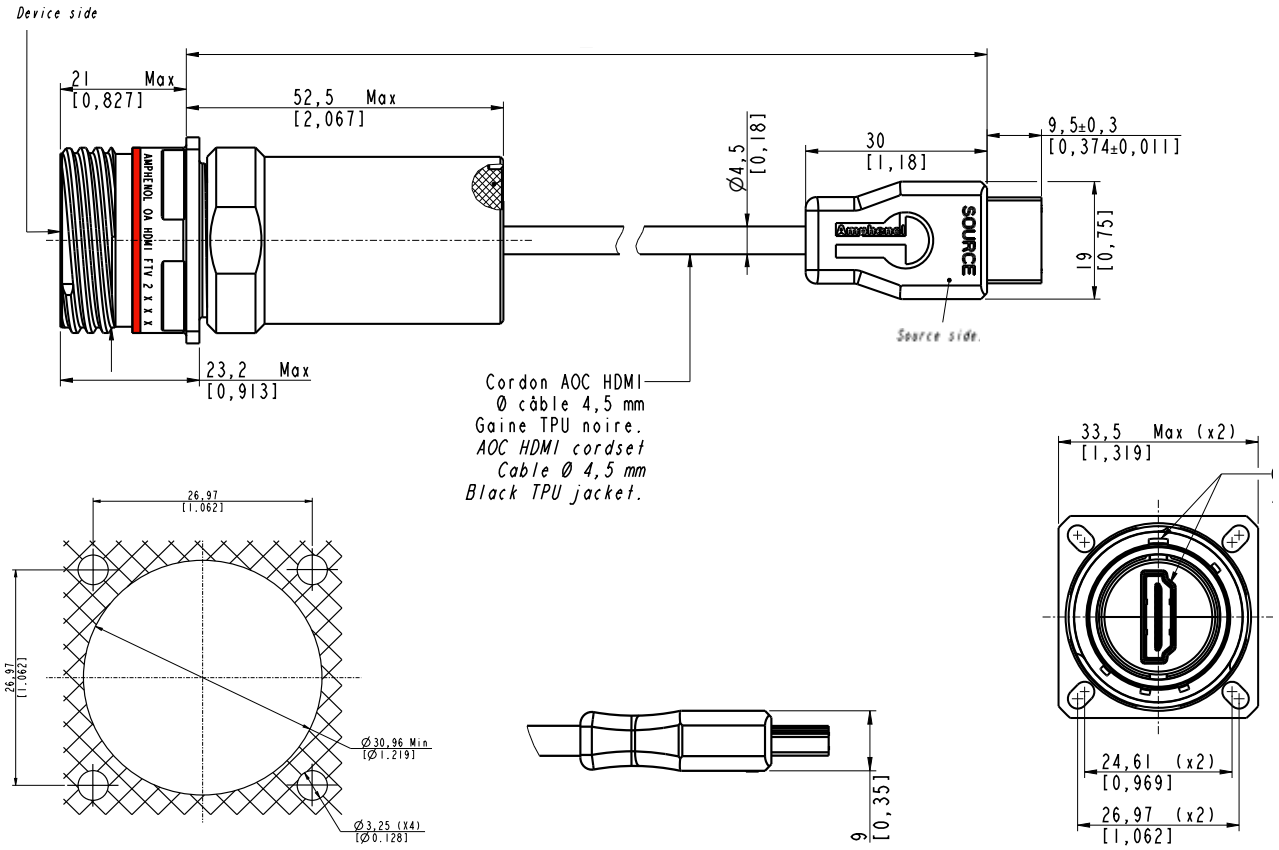

Reduced flange receptacle – Jam nut shell type 7 - Hexagonal nut mounting

Part number type: **OA HDMI FTV 7 X X XXXX F312**

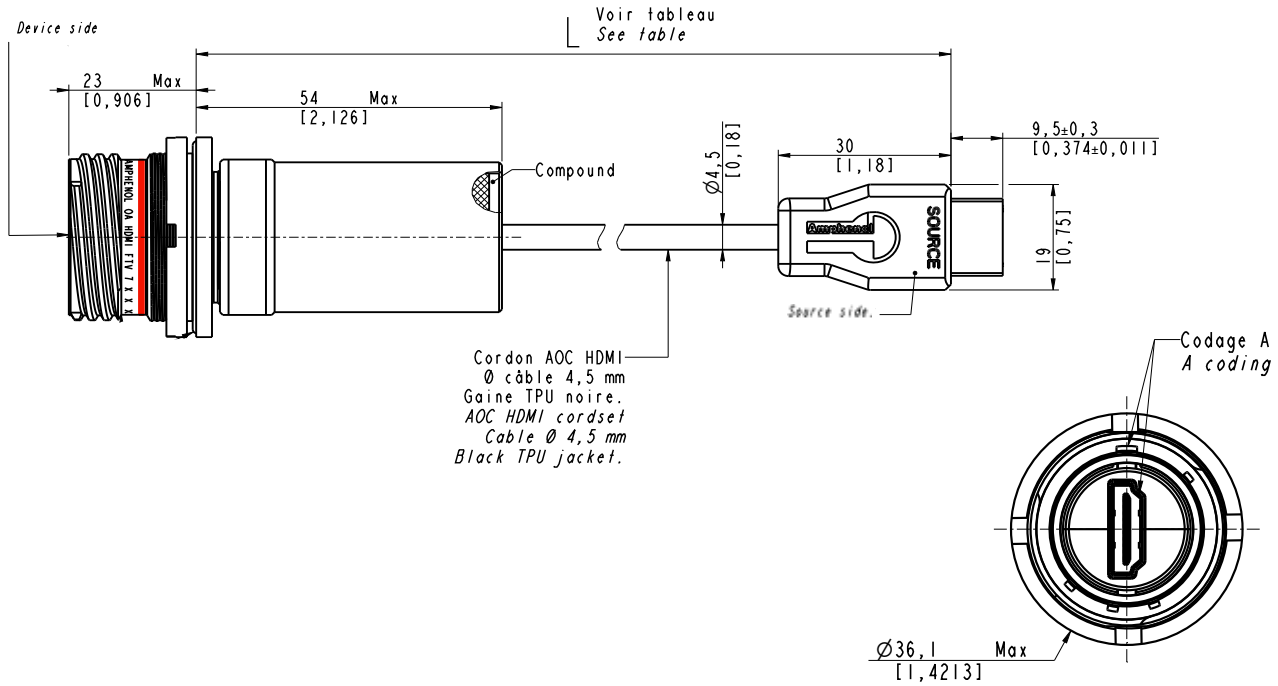

AOC HDMI

AOC HDMI selection guide

Define your own solution by selecting options in the scheme below

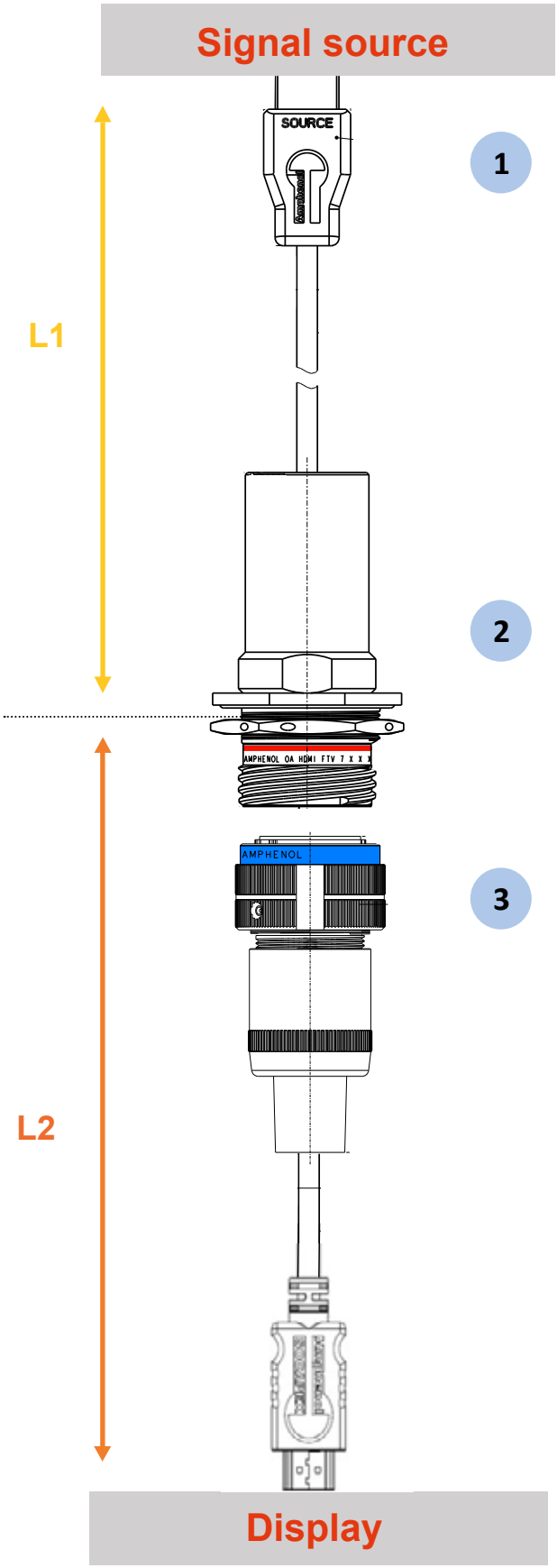

1 Define the type of connection :
- HDMI standard
- HDMIFTV plug

If you want a HDMIFTV :
- Nickel plated, Olive drab cadmium plated or Black zinc nickel plated.
- Protective cap or not.

L1 Define the lenght of L1:
- 5 to 100 meters maximum

2 Define the HDMI AOC shell:
- Square flange or jam nut receptacle.
- Plug
- Nickel plated, Olive drab cadmium plated or Black zinc nickel plated.
- Protective cap or not.

3 Define the type of HDMI cable end :
- Standard HDMI Type A plug.
- HDMIFTV plug if AOC is receptacle
- HDMIFTV recepatcle if AOC is plug
- Nickel plated, Olive drab cadmium plated or Black zinc nickel plated.
- Protective cap or not

L2 Define the lenght copper cordset:
- 5 meters maximum

AOC HDMI

How to order - AOC HDMI

1.	2.	3.	4.	5.
Series	Shell type	Coding	Material and platings	Cordset length
OA HDMI FTV	2	A	G	30

1. Series

OA HDMI FTV	Optical Amplifier HDMI Field

2. Shell type

6	Plug
2	Square flange receptacle
7	Jam nut receptacle

3. Coding

A	Coding A
B	Coding B

4. Material and platings

	Shell material	Shell plating
G	Aluminum	Olive drab cadmium
N	Aluminum	Nickel ✓
ZN	Aluminum	Black zinc nickel ✓
TZ	Aluminum	Tin Zinc ✓ NEW
BZ	Bronze ✓	
S	Inox	

✓: RoHS compliant

5. Cordset length

	Meters	Inch
0050	5 m	196,85
● 0075	7,5 m	295,27
● 0100	10 m	393,70
● 0150	15 m	590,55
● 0200	20 m	787,40
0300	30 m	1181,10
0400	40 m	1574,80
0500	50 m	1968,50
1000	100 m	3937,01

● Standard configurations available from stock in our distributors network.

Examples :

Part number	Description
OA HDMI FTV 6 A G 0500	Optical Amplifier HDMI field, plug, coding A, olive drab cadmium plating, 50 meters cordset lenght
OA HDMI FTV 2 B N 0300	Optical Amplifier HDMI field, square flange receptacle, coding B, nickel plating, 30 meters cordset lenght
OA HDMI FTV 7 A BZ 1000	Optical Amplifier HDMI field, jam nut receptacle, coding A, bronze shell, 100 meters cordset lenght

Discover a selection of products compatible with your AOC HDMI :

HDMI FTV

- Shell size 17
- Data transmission :
  HDMI 2.0 protocol
  18 Gbit/s with 6Gbit/s per lane
  4K UHD at 60 Hz

Amphenol Socapex
948, promenade de l'Arve BP29
74311 Thyez Cedex - France
Phone: +33 (0)4 50 89 28 00
contact@amphenol-socapex.fr

We reserve the right to modify our products in any way we deem necessary.
Any duplication is prohibited, unless approved in writing.

www.amphenol-socapex.com
Follow Amphenol Socapex on social media :

Designed by Amphenol Socapex
DOC-001070-ANG - July 2025

Amphenol SOCAPEX