Amphenol SOCAPEX

USB3 Type A - Type C Adapter

Description

The USB3 Type A - Type C™ adapter is a complete ruggedized solution around USB3.2 Gen1 Type A and USB Type C. This solution allows you to integrate new equipment featuring a USB Type C port without disassembling an existing USB2 or USB3 Type A link. Two adaptation options are available to facilitate integration into your system: Type C host or Type C device (see description table).The USB3FTV™ receptacle dedicated to be mounted on your panel allows you to reinforce and protect your system against leakage, shock, vibration and much more. There are 2 mechanical coding possibilities (receptacle insert rotation) on the USB-A side and a fully reversible USB-C port on other side that can be integrated with our USB3CFTV™ plug.

Main features

Main characteristics:

- Tri Start Thread coupling mechanism (MIL-DTL-38999 series III type) - Shell size 15
- 2 mechanical coding/polarization possibilities by the user (receptacle insert rotation)
- Sealed against fluids and dusts (IP68)
- Shock, vibration and traction resistant
- No cabling operation in field and no tools required
- Improved EMI protection

Data transmission :

- USB specification 3.2 Gen1
- Data rate: up to 5Gb/s for high speed USB

Environmental protection:

- Sealing (when mated and unmated): IP68 (temporary immersion)
- Salt spray: - 48 h with nickel plating ✓
  - 500 h with olive drab cadmium
  - 1000 h with marine bronze shell ✓
  - 500 h with black zinc nickel ✓
- Fire retardant / Low smoke: UL94 V0 and EN45545
- Vibrations: 10 - 500 Hz, 10 g, 3 axes: no discontinuity > 1micro s
- Shocks: IK06 > weight of 250 g drop from 40 cm [15.75 in] into connectors (mated pair)
- Humidity: 21 days, 43°C, 98% humidity
- Temperature range: - 40°C / +85°C

✓: RoHS compliant

Square flange	Jam nut	Reduced flange

Markets & Applications

C6ISR, Battlefield Communication

Ground Vehicles

Naval

Applications :

- Displays, Consoles, Visions systems, Situation awareness

USB3 TYPE A - TYPE C - ADAPTER

Overall dimension

Square flange receptacle - Shell type 2 - 4 mounting holes

Part number type: **31930X-XXX**
32242X-XXX

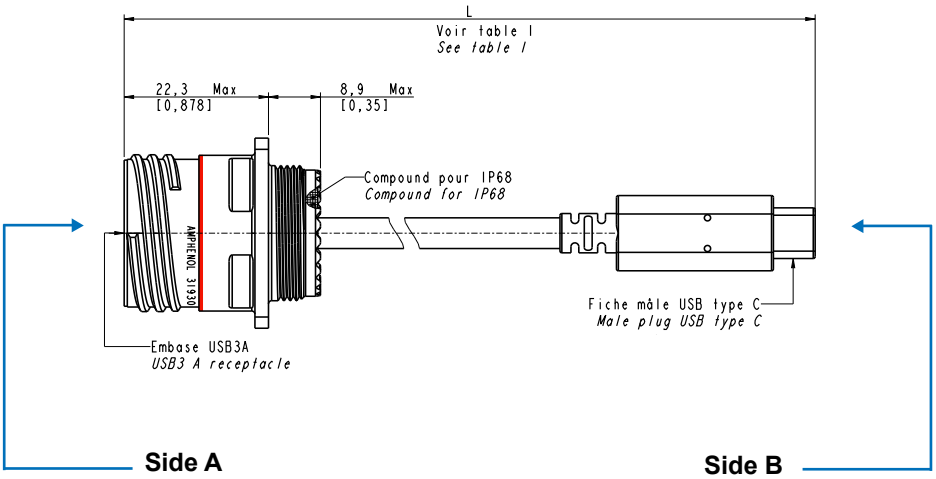

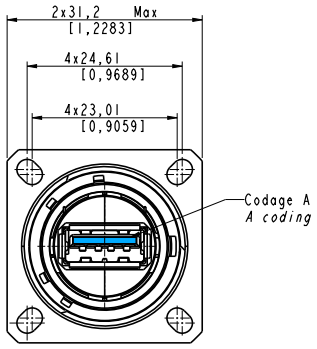

Panel drilling

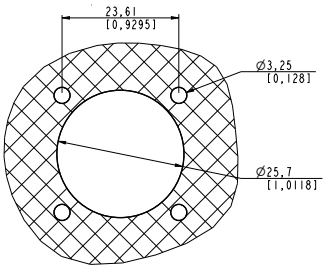

SIDE A - HOST ➔ SIDE B DEVICE IN SQUARE FLANGE RECEPTACLE

Designation

	Plating			Lenght	
31930	G		–	015	15 cm (5.91 inch)
	N			030	30 cm (11.81 inch)
	ZN			050	50 cm (19.68 inch)
	BZ			100	1 m (39.37 inch)

SIDE B - HOST ➔ SIDE A DEVICE IN SQUARE FLANGE RECEPTACLE

Designation

	Plating			Lenght	
32242	G		–	015	15 cm (5.91 inch)
	N			030	30 cm (11.81 inch)
	ZN			050	50 cm (19.68 inch)
	BZ			100	1 m (39.37 inch)

Important note:
- For other codings, please consult us.

USB3 TYPE A - TYPE C - ADAPTER

Overall dimension

Jam nut receptacle - Shell type 7 - Hexagonal nut mounting

Part number type: **31932X-XXX**
32241X-XXX

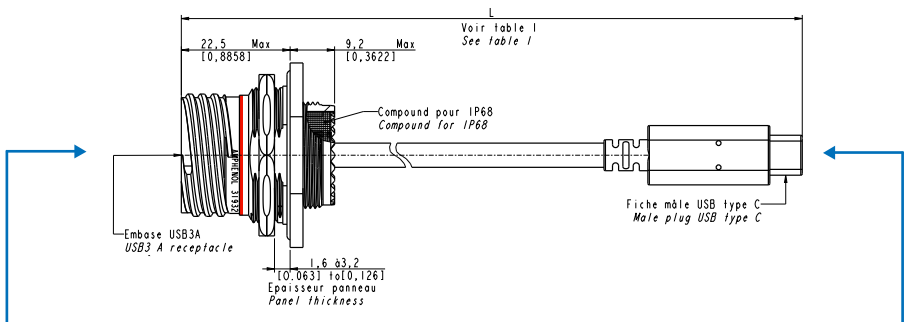

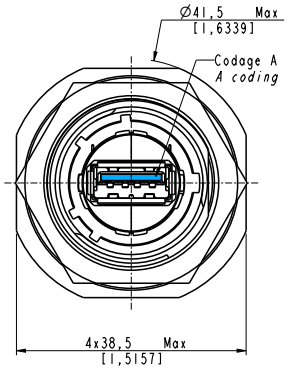

Panel drilling

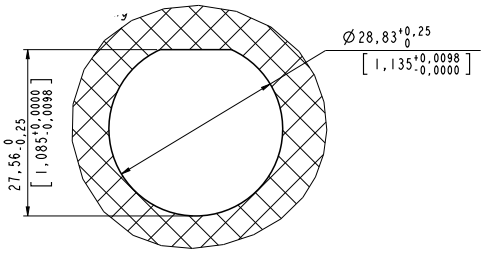

SIDE A - HOST ➔ SIDE B DEVICE IN JAM NUT RECEPTACLE

Designation

	Plating			Lenght	
31932	G		–	015	15 cm (5.91 inch)
	N			030	30 cm (11.81 inch)
	ZN			050	50 cm (19.68 inch)
	BZ			100	1 m (39.37 inch)

SIDE B - HOST ➔ SIDE A DEVICE IN JAM NUT RECEPTACLE

Designation

	Plating			Lenght	
32241	G		–	015	15 cm (5.91 inch)
	N			030	30 cm (11.81 inch)
	ZN			050	50 cm (19.68 inch)
	BZ			100	1 m (39.37 inch)

Important note:
- For other codings, please consult us.

USB3 TYPE A - TYPE C - ADAPTER

Overall dimension

Reduced flange receptacle - Jam nut shell type 7 - Castle nut mounting

Part number type: **31931X-XXX**
32240X-XXX

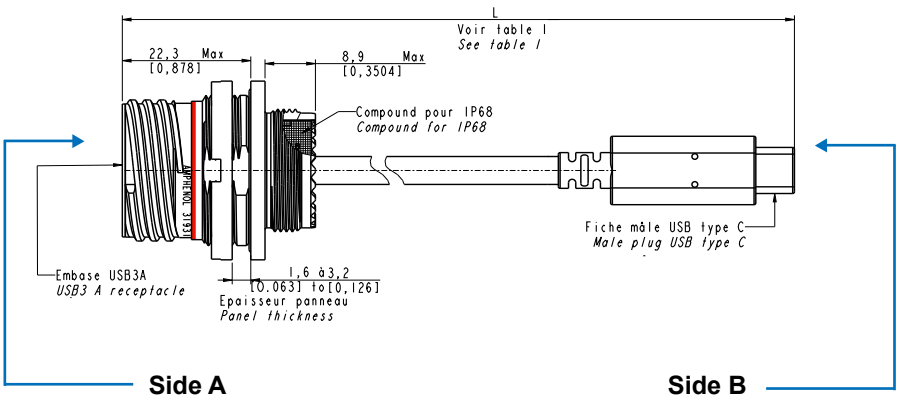

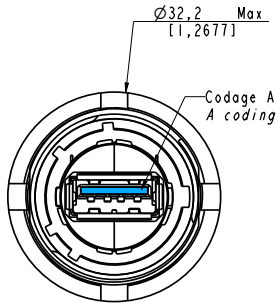

Panel drilling

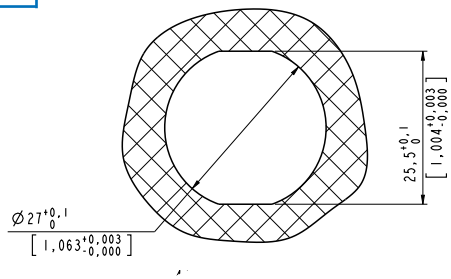

SIDE A - HOST ➔ SIDE B DEVICE IN REDUCED FLANGE RECEPTACLE

Designation					
	Plating			Lenght	
31931	G		–	015	15 cm (5.91 inch)
	N			030	30 cm (11.81 inch)
	ZN			050	50 cm (19.68 inch)
	BZ			100	1 m (39.37 inch)

SIDE B - HOST ➔ SIDE A DEVICE IN REDUCED FLANGE RECEPTACLE

Designation					
	Plating			Lenght	
32240	G		–	015	15 cm (5.91 inch)
	N			030	30 cm (11.81 inch)
	ZN			050	50 cm (19.68 inch)
	BZ			100	1 m (39.37 inch)

Important note:
- For other codings, please consult us.

USB3 TYPE A - TYPE C - ADAPTER

USB3 Adapter selection guide

Define your own solution by selecting options in the scheme below

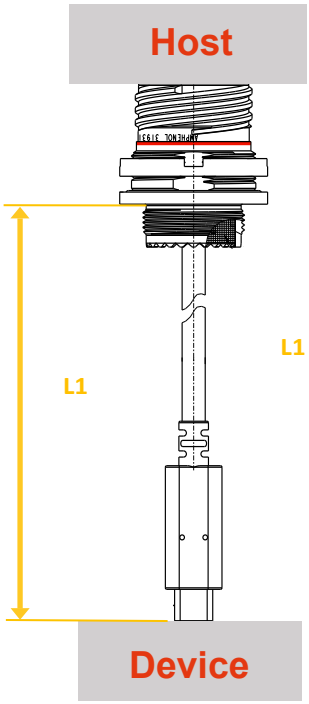

Part number : 31930
31931
31932

L1 Define the lenght of L1:
- Standard lenghts : 15 cm; 30 cm; 50 cm or 1 m.

Additional possibilities on this link :
- Protective cap or not
- USB3CFTV plug on USB Type C end
USB3CFTV6X

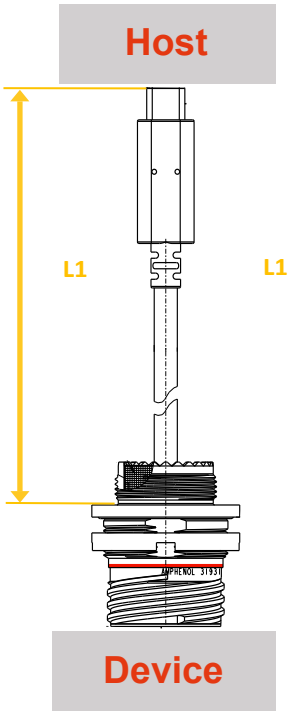

Part number : 32240
32241
32242

L1 Define the lenght of L1:
- Standard lenghts : 15 cm; 30 cm; 50 cm or 1 m.

Additional possibilities on this link :
- Protective cap or not
- USB3CFTV plug on USB Type C end
USB3CFTV6X

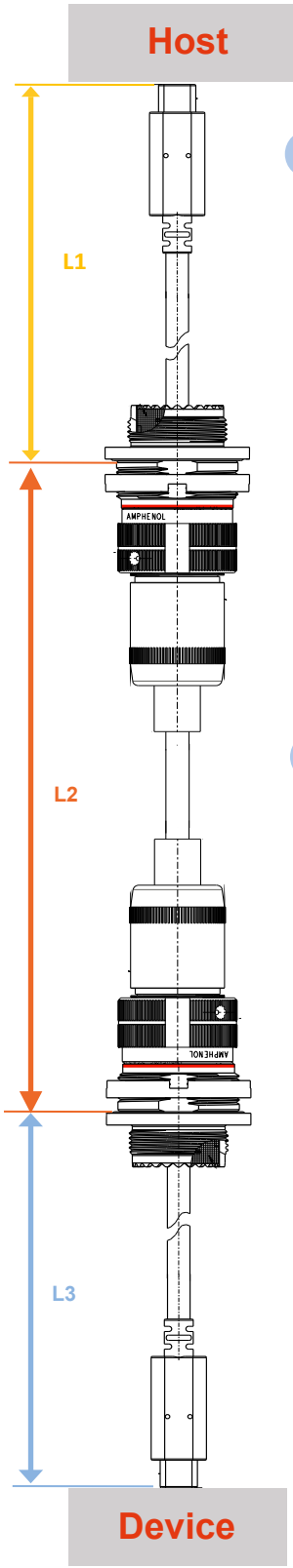

1 Part number : 32240
32241
32242

L1 Define the lenght of L1:
- Standard lenghts : 15 cm; 30 cm; 50 cm or 1 m.

Additional possibilities on this link :
- Protective cap or not
- USB3CFTV plug on USB Type C end
USB3CFTV6X

2 Define the type of USB3 cordset :
- USB3 AA straight cordset
OR
- Specific straight cordset with reinforced USB3FTV plugs.

L2 Standard lenght :
- Your total link shouldn't exceed 3m

Example : 50 cm on both ends, middle link will be 2m

3 Part number : 31930
31931
31932

L3 Define the lenght of L1:
- Standard lenghts : 15 cm; 30 cm; 50 cm or 1 m.

Additional possibilities on this link :
- Protective cap or not
- USB3CFTV plug on USB Type C end
USB3CFTV6X

NOTES

Discover a selection of products compatible with your USB3 Type A - USB3 Type C - Adapter

USB3CF TV

- Shell size 11
- Power delivery; audio; video; USB3.2
- Compatible with USB3.2 Gen 1
- Recepatcle fully reversible
- Thread coupling, MIL-DTL-38999 III type

USB3 Cordsets

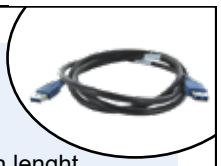

- USB3.2 Gen 1
- Up to 3 m max in lenght
- Reinforced PUR Jacket
- Halogen free
- Double shielding

Amphenol Socapex
948, promenade de l'Arve BP29
74311 Thyez Cedex - France
Phone: +33 (0)4 50 89 28 00
contact@amphenol-socapex.fr

We reserve the right to modify our products in any way we deem necessary.
Any duplication is prohibited, unless approved in writing.

www.amphenol-socapex.com
Follow Amphenol Socapex on social media :

Designed by Amphenol Socapex
DOC-001066-ANG - March 2024

Amphenol SOCAPEX